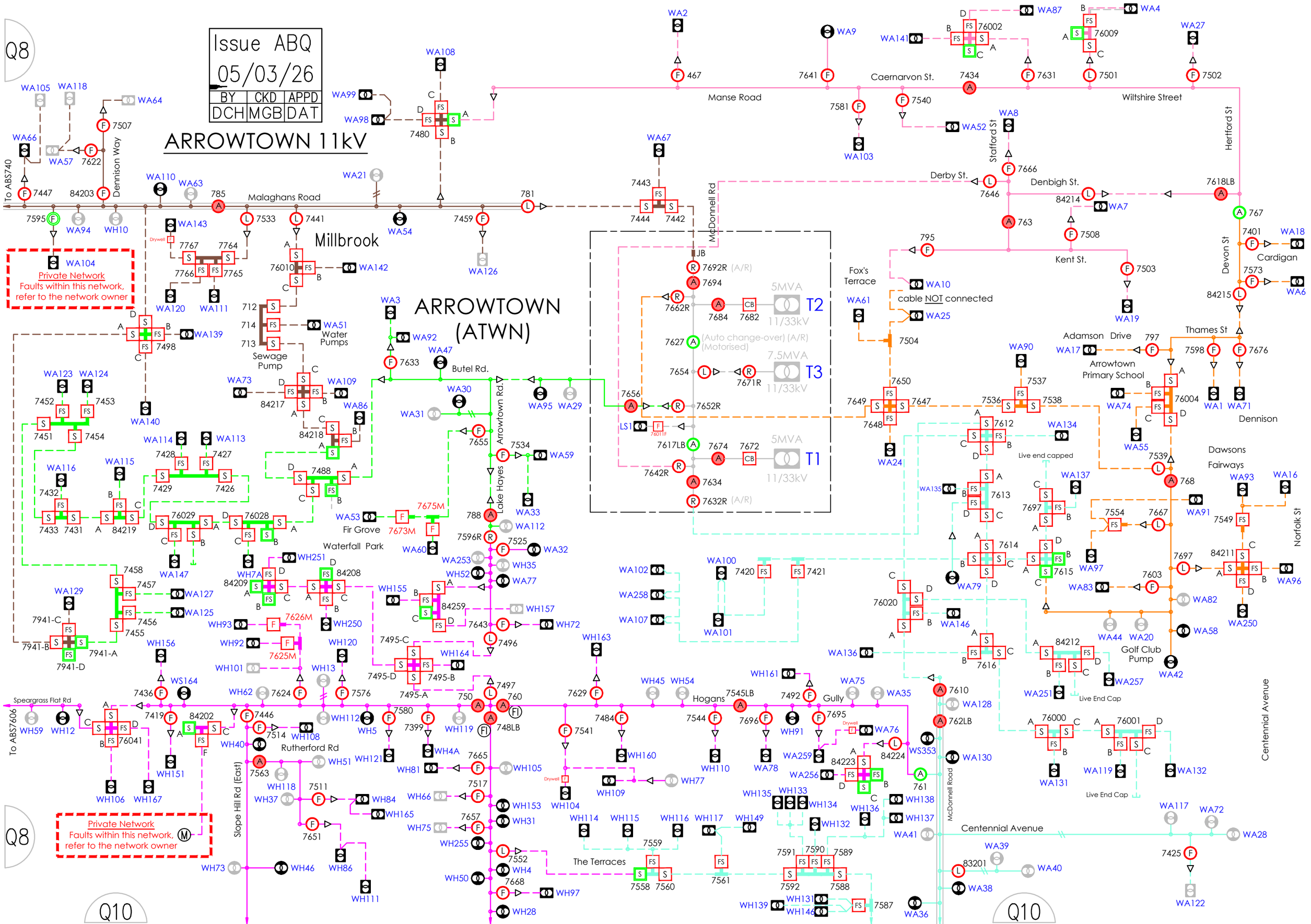
Issue ABQ
05/03/26
BY CKD APPD
DCH MGB DAT
ARROWTOWN 11kV
ARROWTOWN (ATWN)
Millbrook
Manse Road
Caernarvon St.
Wiltshire Street
Malaghans Road
Stafford St
Hertford St
Derby St.
Denbigh St.
Kent St.
Devon St
Cardigan
McDonnell Rd
Fox's Terrace
cable NOT connected
Adamson Drive
Arrowtown Primary School
Thames St
Dennison
Dawsons Fairways
Norfolk St
Butel Rd.
Arrowtown Rd.
Lake Hayes
Fir Grove
Waterfall Park
Dennison Way
Sewage Pump
Water Pumps
Private Network
Faults within this network, refer to the network owner
5MVA
T2
11/33kV
7.5MVA
T3
T1
(Auto change-over) (A/R)
(Motorised)
Hogans
Gully
Rutherford Rd
Slope Hill Rd (East)
The Terraces
Live end capped
Live End Cap
Golf Club Pump
Centennial Avenue
Speargrass Flat Rd
To ABS740
To ABS7606
Q8
Q10